Studies on the Influence of some Supporting Electrolytes on the Diffusion Current and half Wave Potential of the Reducible Ions in Polarographic Studies

Comparative Role of Interfacial Tension, Adsorption and Ionic Strength in the Polarographic Reduction of Cd^{++} Ions in $CdCl_2$ with Different Concentration of the Supporting Electrolytes. Sodium Acetate, Magnesium Acetate, Zinc Acetate and Strontium Acetate

By Amar Nath and Abani K. Bhattacharya

With 1 Figure

Summary

The variations in the diffusion current (id) and half-wave potential ($E_{\frac{1}{2}}$) heve been studied in the polarographic reduction of Cd^{++} in $CdCl_2$ with different concentration of the supporting electrolytes given above. It has been observed that when the concentraton of the supporting electrolyte is varied from 0.01 M to 1.0 M, there is a regular fall in the interfacial tension at the mercury-solution interface. The order of decrease in id corresponds with the fall in the interfacial tension as the concentration of the supporting electrolyte increases. Since the order of adsorption at the mercury surface was observed by Patrick[1]) to be the same as lowering of the interfacial tension with increasing concentration, our observations lend strong support to the role of adsorption in the lowering of id values with increasing concentration of the supporting electrolytes reported in this paper.

Introduction

In our previous communication[2]) the variations in id and $E_{\frac{1}{2}}$ of the reducible Cd^{++} ions in the presence of the supporting electrolytes KCl, KNO_3, K_2SO_4 and NaCl within the range 0.01 M to 0.5 M were critically discussed and it was suggested that the variations in interfacial tension and adsorption may greatly influence the validity of the Ilkovic's equation and that every reducible ion in its environments should be considered a specific system to be elaborately investigated for all parameters to arrive at a conclusive result.

[1]) Patrick, Z. physik. Chem. **86**, 545 (1914).

[2]) J. prakt. Chem. (4) **21**, 103 (1963).

I. M. KOLTHOFF and J. J. LINGANE[3]) attributed the variations in the limiting current of some reducible ions caused by foreign electrolytes to the changes in the effective diffusion coefficient of the reducible ions. J. J. LINGANE[4]) observed that decrease in the value of the activity coefficient of the reducible ion at higher concentration of KCl and KNO_3 was responsible for the increase in $E_{\frac{1}{2}}$ of Tl^+, Zn^{++}, Pb^{++}, and Cd^{++}. S. P. SCHAIKIND[5]) observed that the height of the polarographic wave of Cd^{++} in Na_2SO_4 (0.1—0.9 M), $ZnCl_2$ (0.1—1.8 M) and $ZnSO_4$ (0.1—1.8 M) was the greater, the higher the dilution of the supporting electrolytes. T. A. KRIVKOVA[6]) supposed that the movement of the solution near the mercury drop also influences the height of the polarographic wave upto 1 M concentration of the supporting electrolytes of KCl for the reduction of Pb^{++}. The role of stirring effect to explain the variations of id was also emphasised by W. M. MACNAVIN and E. W. BALIS[7]). The influence of ionic strength and character of ionic environment on the variations of $E_{\frac{1}{2}}$ was emphasised by DONALD D. DEFORD and L. DONALD ANDERSEN[8]). It was observed by A. A. VLECK[9]) that $E_{\frac{1}{2}}$ of Tl^+ and Pb^{++} varied linearly with the $\sqrt{\mu}$, where μ was the ionic strength. KARL MICKA[10]) observed that apart from ionic strength the role of mercury flow also influenced the values of $E_{\frac{1}{2}}$ of Tl^+ and Zn^{++}.

CHARLES N. REILLY and WARNER STUMM[11]) observed that the adsorption of surface active substances at dropping mercury cathode may decrease the limiting current and shift the half-wave potential. W. H. REINMUTH and coworkers[12]) observed that the half-wave potential is remarkably affected by the concentration and constitution of the supporting electrolyte. They visualised that the double layer structure at the electrode was the important factor in the electrode reaction. The existence of the double layer structure may also be connected with phenomena of the interfacial tension and adsorption.

S. N. MUKERJEE and Mrs. CHAKRAVARTY[13]) have studied the influence of supporting electrolytes on $E_{\frac{1}{2}}$ and id of Cd^{++}, Zn^{++}, Ni^{++}, and Co^{++} and suggested that: (I) viscosity (II) complex formation (III) ionic strength (IV)

---

3) J. M. KOLTHOFF and J. J. LINGANE, J. Amer. chem. Soc. **61**, 1045 (1939).

4) J. J. LINGANE, J. Amer. chem. Soc. **61**, 2099 (1939).

5) S. P. SCHAIKIND, J. Appl. Chem. Russ. **13**, 455 (1940).

6) T. A. KRIVKOVA, Zavod. Lab. **9**, 699 (1940).

7) W. M. MACNAVIN and E. W. BALIS, J. Amer. chem. Soc. **65**, 660 (1943).

8) D. D. DEFORD and D. L. ANDERSEN, J. Amer. chem. Soc. **72**, 3918 (1950).

9) A. A. VLECK, Chem. Listy **48**, 1474 (1954).

10) K. MICKA, Chem. Listy **50**, 203 (1956).

11) C. N. REILLY and W. STUMM, U. S. Dept. Com. Office Tech. Serv. 144383, 44, (1959)

12) W. H. REINMUTH and corworkers, J. Amer. chem. Soc. **81**, 2947 (1959).

13) S. N. MUKERJEE and Mrs. CHAKRAVARTY, J. I. C. S. **38**, 12, 955, (1961); **39**, 3, 181 (1962).

interionic attraction and (V) hydrogen over-voltage were the probable factors to influence the value of half-wave potential and diffusion currents.

In view of the opinion of the foregoing authors, it is evident that the variations in id and $E_{\frac{1}{2}}$ in polarographic reduction of cations should be more comprehensively studied in order to elucidate the role of factors which influence the values of id and $E_{\frac{1}{2}}$ in a specific system. In this paper the inflence of adsorption and ionic strength has been compared and discussed in the reducible system of $CdCl_2$.

Experimental

Diffusion current measurements were made with LANGE's polarometer in conjunction with a multiflex galvanometer as reported previously (loc. cit.). The saturated calomel cell used as a reference electrode was connected to the solution cell through the salt bridge of saturated Ammonium-Nitrate solution in order to nullify the effect of Liquid-liquid potential. The solution was deoxygenated by bubbling Hydrogen gas which was prepared and purified by the method given by L. MEITES[14]). Chemicals of B. D. H. and EMERCK's were used and drop time was maintained at three seconds per drop. Gelatine of concentration 0.02% was used as maximum suppresor. The ionic strength ($\frac{1}{2} \Sigma cz^2$) of the system was obtained by calculation.

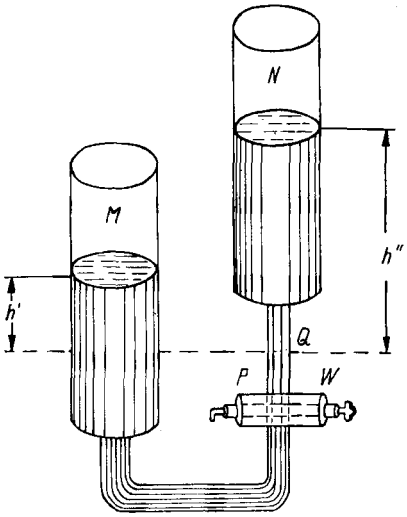

Fig. 1.

In order to determine the interfacial tension between mercury and the different solutions of the supporting electrolytes of varied concentrations in the reducible $CdCl_2$ system, the capillary rise method of BARTELL, CASE and BROWN[15]) was used as shown in the diagram.

By turning the three-way stop cock (W), mercury was drawn from the reservoir M, to fill the trap P. The solution remains out of contact with mercury thus drawn in. Now, the stop cock was turned to draw in the liquid in to the trap P from the reservoir N containing the solution. The stop cock was turned again to collect the solution in the capillary with mercury in such

[14]) L. MEITES, Polarographic Techniques, p. 33, Interscience Publishers, New York 1955.

[15]) BARTELL, CASE and BROWN, J. Amer. chem. Soc. 55, 2419 (1933).

a way that mercury was able to rise very slowly in the capillary till it attained the equilibrium height inside the capillary at a point Q. Thus an interface was formed inside the capillary between the liquid and the mercury surface. The heights h′ and h″ of the mercury and liquid surfaces respectively above Q were measured with the help of a cathetometer. The interfacial tension (σ_i) was then obtained by the relation:

$$\sigma_i = \frac{r \cdot g}{2} (h' d' - h'' d'')$$

where r is the radius of the capillary, d′ and d″ are the density of the mercury and the solution respectively. The value of σ_i was calculated by using the above formula.

Observations

Table 1
(Cd^{++} as the reducing ion in the $CdCl_2$ solution)
Supporting Electrolyte — Sodium Acetate

Conc.	id (μa)	$E\frac{1}{2}$ (volt)	σ_i (dynes/cm)	T · RT	μ
M/100	8.84	0,575	401.95	—	0.013
M/25	8.66	0,585	391.28	17.71	0.043
M/10	8.46	0.595	387.24	10.16	0.103
M/2	8.10	0.600	383.46	5.408	0.503
M	7.92	0.625	382.82	2.125	1.003

Table 2
(Cd^{++} as reducing ion in $CdCl_2$ solution)
Supporting electrolyte — Zinc Acetate

Conc.	id (μa)	$E\frac{1}{2}$ (volt)	σ_i (dynes/cm)	T · RT	μ
M/100	9.34	0.585	406.60	—	0.033
M/25	9.16	0.585	397.40	15.28	0.123
M/10	7.92	0.590	392.37	12.65	0.303
M/2	7.00	0.605	385.44	9.913	1.503
M	6.26	0.610	384.20	4.119	3.003

Table 3
(Cd^{++} as the reducing ion in $CdCl_2$ solution)
Supporting electrolyte — Magnesium Acetate

Conc.	id (μa)	$E\frac{1}{2}$ (volt)	σ_i (dynes/cm)	T · RT	μ
M/100	10.13	0.585	419.44	—	0.033
M/25	9.34	0.590	411.67	12.57	0.123
M/10	9.16	0.595	408.56	8.322	0.303
M/2	7.92	0.615	404.46	5.865	1.503
M	6.82	0.620	402.90	5.181	3.003

Table 4
(Cd^{++} as the reducing ion in $CdCl_2$ solution)
Supporting electrolyte — Strontium Acetate

Conc.	id (μa)	$E\frac{1}{2}$ (volt)	σ_i (dynes/cm)	T · RT	μ
M/100	10.31	0.585	405.03	—	0.033
M/25	9.34	0.590	401.04	6.627	0.123
M/10	8.42	0.595	398.78	5.682	0.303
M/2	7.92	0.625	397.75	1.473	1.503
M	6.26	0.635	—	—	3.003

Table 5

Supporting Electrolyte	Conc. limit	Variation limits of id	Variation limits of $E\frac{1}{2}$	Variation in TRT	Variation in μ
Sodium Acetate	0.01 M to 1.0 M	8.84—7.92	0.57—0.62	17.72—2.12	0.013—1.003
Zinc Acetate	0.01 M to 1.0 M	9.34—6.26	0.58—0.62	15.28—4.12	0.033—3.003
Magnesium Acetate	0.01 M to 1.0 M	10.13—6.82	0.58—0.62	12.57—5.18	0.033—3.003
Strontium Acetate	0.01 M to 1.0 M	10.31—6.26	0.58—0.63	6.63—1.5	0.033—3.003

Discussion

PATRICK (loc. cit.) determined the interfacial tension between mercury and mercurous nitrate, salicylic acid, picric acid and neufuchsin and observed that the interfacial tension decreases rapidly in the range of lower concentration and then the fall in the interfacial tension becomes less and less as concentration of the solution was increased. The maximum fall in the case of above solutions was observed between 0 to 0.2 M and least between 0.5 to 1.0 M. His experiments showed that adsorption was undoubtedly connected with the lowering of the interfacial tension (σ_i) according to the GIBB's adsorption equation. He further observed that the quantity of these substances adsorbed by mercury was a function of the concentration and their estimation of adsorption (x/m) when plotted against the equilibrium concentration (C) showed that the order of adsorption of the above four substances was the same as that in which they depressed the value of the

interfacial tension. This is a very relevent factor which should be considered in the behaviour of the dropping mercury electrode in the environment of the supporting electrolytes ranging from low to high concentration. The amount adsorbed per unit mass (x/m) at constant temperature is comparatively greater at low range of concentrations and similar values of T are given by the GIBB's adsorption equation for the supporting electrolytes (Na, Zm Mg and Sr Acetates) which have been recorded in tables No. 1 to 4. Since inorganic cations are capillary inactive, it may be reasonably suggested that the organic acetate ions are responsible for lowering the interfacial tension as a result of the adsorption at the surface of mercury and for decreasing the diffusion current id and increasing the value of $E_{\frac{1}{2}}$ as the concentration of the above mentioned supporting electrolytes (Acetates of Na, Zn, Mg, and Sr) was increased. Thus it may be inferred that the adsorption of the Acetate ion on the surface of the mercury drop plays an important part in causing the variations in id and $E_{\frac{1}{2}}$ observed in the polarographic reduction of Cd^{++} in $CdCl_2$ solution.

FORD and ANDERSEN (loc. cit.) observed that the ionic strength and character of ionic environment were responsible for the variations in id and $E_{\frac{1}{2}}$. VLECK (loc. cit.) further observed that $E_{\frac{1}{2}}$ was linear with μ, where μ was the ionic strength in thecase of Tl^{+} and Pb^{++}. Taking into consideration the dependence of the variations in id and $E_{\frac{1}{2}}$ on the ionic strength as suggested by these authors, it does not exclude, however, the effective role of adsorption of the electro-capillary active anions on the surface of the dropping mercury electrode. As ionic strength increase at high concentration the amount of the anion adsorbed would decrease as compared to low concentration. Thus there will be a lowering in the value of id at high concentration of the supporting electrolyte, while the $E_{\frac{1}{2}}$ will suffer a more negative shift. Hence, the concepts of ionic strength and adsorption to explain the variations seem to be interlinked. Thus the overall picture of the variation in id and $E_{\frac{1}{2}}$ of Cd^{++} in $CdCl_2$ at different concentrations of the acetates of Na, Zn, Mg and Sr used as supporting electrolytes lend fairly a support to the role of adsorption of the anion by which it is possible to explain the characteristics variations of id and $E_{\frac{1}{2}}$ given in table no. 5.

S. N. MUKERJEE and coworkers (loc. cit.) studied the effect of different supporting electrolytes on id and $E_{\frac{1}{2}}$ of Cd^{++}, Zn^{++}, Ni^{++} and Co^{++}, and suggested that the factors responsible for the variations in id and $E_{\frac{1}{2}}$ on the above reducible systems might be combined role of viscosity, complex formation, ionic strength, interionic attraction and Hydrogen over-voltage. While each of the parameters suggested by them may influence the variations in the current-voltage curves depending upon the specific nature of the system, it is difficult to support by experimental results the combined role

of so many parameters, unless elaborate experiments are performed on a particular reducible system to study the role of each one of the factors. It was, therefore, deemed necessary to study the variations in the interfacial tension and the ionic strength on the reducible Cd^{++} in $CdCl_2$ with different concentration of the supporting electrolyte. Our experimental values showing the interfacial tension and its correlation with the adsorption give a deffinite evidence of the role of adsorption of Acetate ion at the mercury-solution interface, so far as the specific nature of the system is concerned. Further work is in progress.

Agra (India), Chemical Laboratories, Agra College.

Bei der Redaktion eingegangen am 16. Oktober 1963.